PALFINGER

45' WORKING HEIGHT - ARTICULATED/
TELESCOPIC - INSULATED - MATERIAL HANDLER

ETC MH 40 IH
BUCKET TRUCK

LIFETIME EXCELLENCE



Standard Features:

- Articulating telescopic aerial lift that meets or exceeds ANSI A92.2
- Insulated boom meets ANSI A92.2 Category C (46 kV and below)
- Insulated single-hand proportional upper controls with start-stop, variable speed, and emergency descent valve
- Hydraulic platform leveling: Automatic or manual control for dump or operator rescue
- Outrigger interlock and motion alarm
- Hydraulic bucket rotator (180°)
- Top-mount rotating, 3 ft (0.9 m) jib with hydraulic lift and hoist
  - 1,000 lb. (454 kg.) max capacity
  - 300 lb. (136 kg.) capacity at full side reach
- Hydraulic tool circuit at platform
- Adjustable boom wear pads and replaceable pin bushings
- Powder coating for better durability and corrosion protection
- Class leading aerial rigidity has less bounce

Standard Specifications:

Platform Height[1]	40 ft. (12.19 m)
Working Height	45 ft. (13.72 m)
Reach	30 ft. (8.53 m)
Platform Capacity	400 lb. (181 kg.)
Lower Boom Articulation	0 to 94°
Upper Boom Articulation	-17 to 75°
Stowed Travel Height	10 ft. 4 in. (3.15 m)
Rotation	Continuous

[1] Based on chassis frame height of 40 inches (1016 mm)

Requirements:

Vehicle Chassis	19,500 lb. (8,845 kg.) GVWR[2] (7,000 lb. (3,175 kg.) GAWR front and 13,500 lb. (6,123 kg.) GAWR rear) with 84 in. (2,134 mm) min. cab to axle
Outriggers	Front A-frame
Hydraulic System	Open-center, 4.5 – 5.5 gal/min (17-21 L/min) at 2,250 psi (155 bar)

[2] Required GVWR can vary with chassis, aerial lift mounting location, service body, accessories, and desired payload.

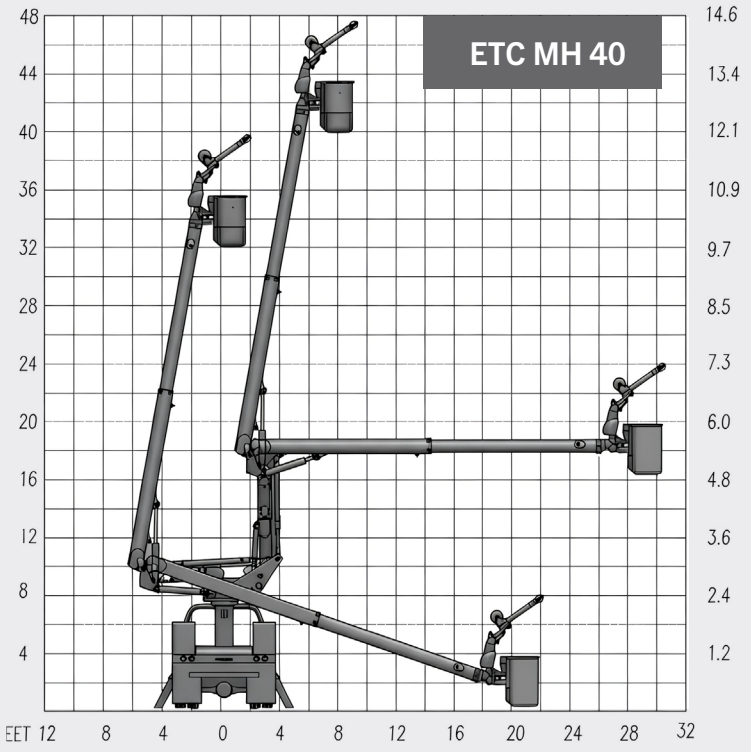



TRUE ONE-HANDED OPERATION

Our control layout frees up your second hand for tools, materials, or added stability, helping you to work smarter, faster and safer.

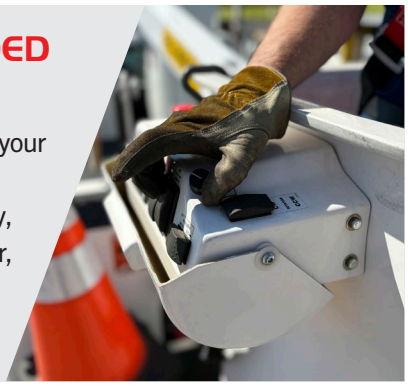



POWER IN EVERY POSITION

Every boom angle delivers maximum lift and strength, letting crews handle heavier loads across more of the working envelope with power and confidence. Optional 2' elevator adds even more flexibility for every job.

REACH FURTHER. LIFT MORE.

Top-mount, rotating jib with a capacity up to 1,000 lbs. (454 kg) and 300 lbs. (136 kg) at full side reach.





EXPERT CARE. ALWAYS WITHIN REACH.

Your uptime is our priority. With over 100 mobile field units and nationwide service centers, we bring preventative maintenance and repairs right to your site.

Palfinger North America, LLC
341 NW 122nd
Oklahoma City, OK 73114
T +1 888 748 3841
F +1 405 755 6829

WWW.PALFINGER.COM

Designed and Assembled in the USA

Disclaimer:
All specifications are based on the 40” frame height and subject to change without notice. Bucket trucks shown on this flyer are partially optional equipped and do not always correspond to the standard version. Country-specific regulations must be observed. Dimensions may vary. Subject to technical changes, errors and translation mistakes.
NAM_AWP_ETCMH40IH_EN |9/25